SALES DRAWING SALES DRAWING

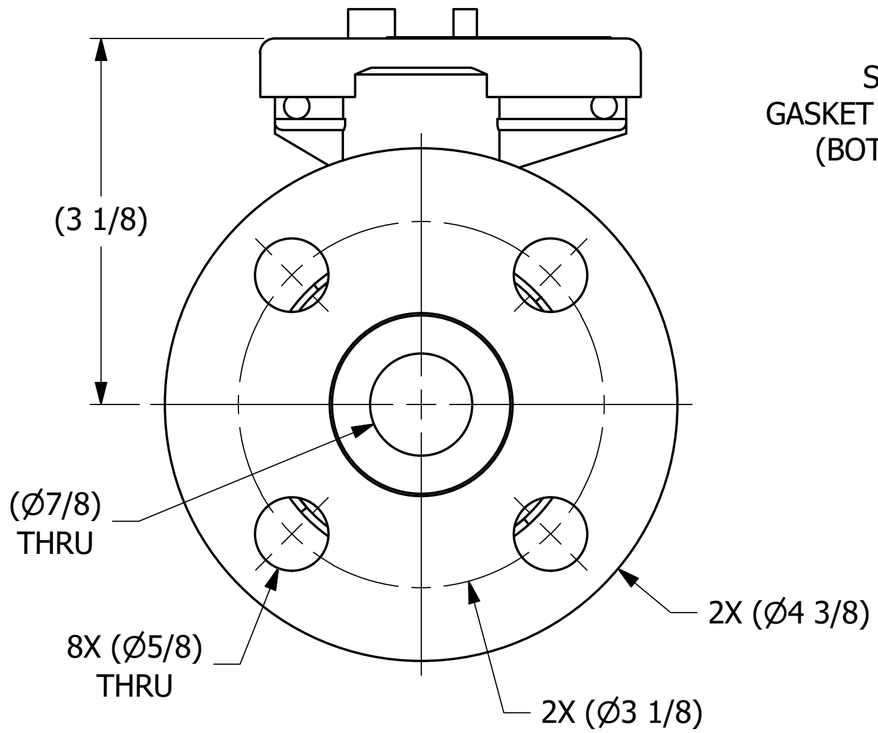

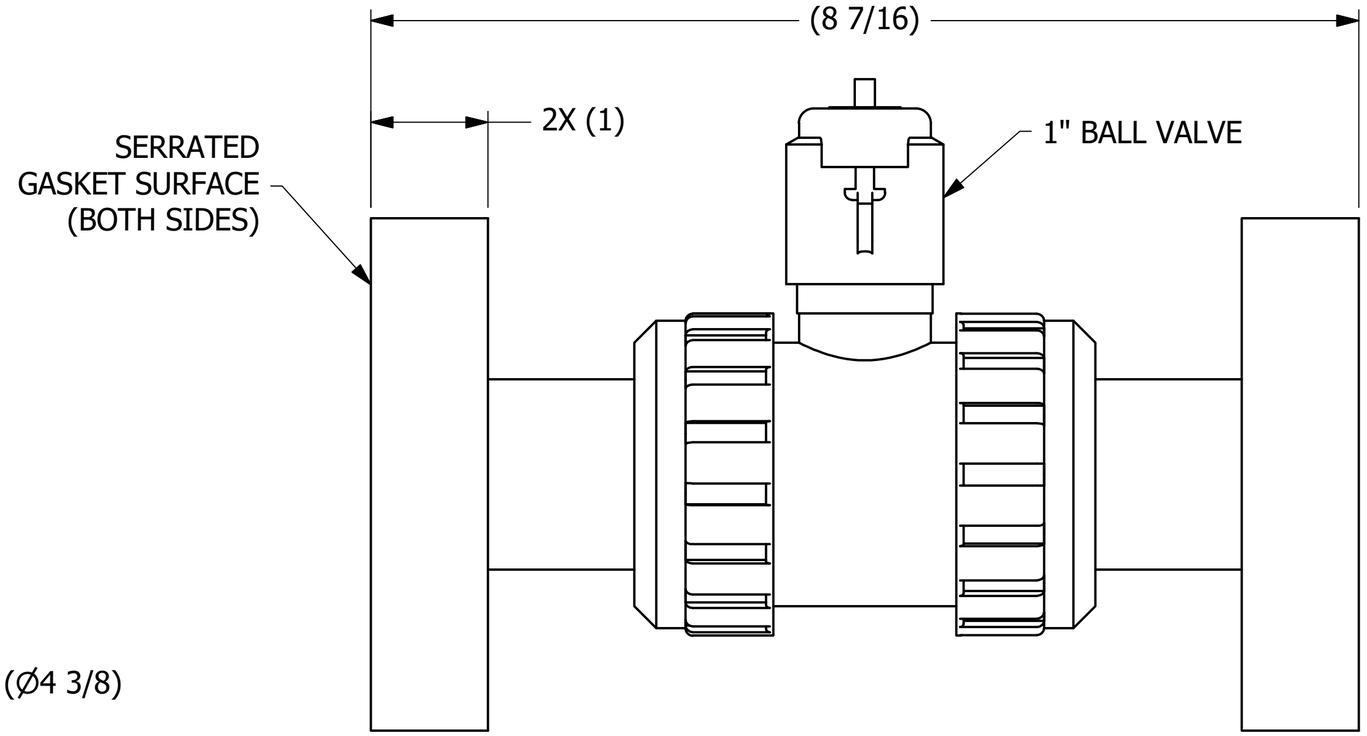

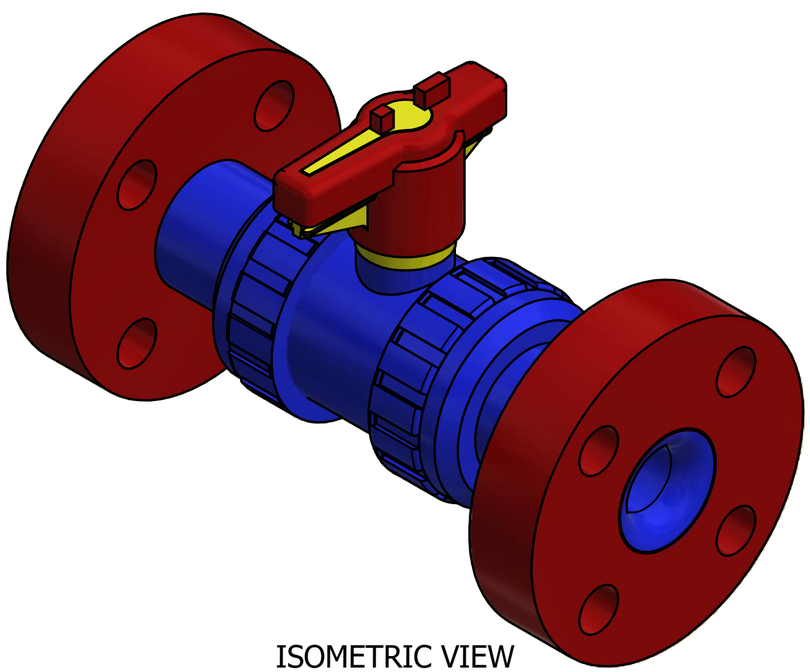

ISOMETRIC VIEW

REV	BY	DATE	REF #	
E	CHL	7/14/20	202007141520	CHL
				PUB

UNLESS OTHERWISE SPECIFIED
DIMENSIONAL TOLERANCES
FRACTIONAL: ±1/16
X.XX: ±.03
X.XXX: ±.015
ANGLE: ±1°
DEBURR ALL SHARP EDGES.
ALL MACHINED SURFACES TO
HAVE A 125 RMS FINISH UNLESS
NOTED OTHERWISE.
THIRD ANGLE PROJECTION

DRAWN BY:	WEB
CHECKED BY:	CHL
PROTOTYPE DATE:	12/17/2012
APPROVED FOR PRODUCTION BY:	WEB
PRODUCTION DATE:	1/25/2013
SIZE:	C
DRAWING #:	34900

SALCO PRODUCTS, INC.

PART NAME: AIR VALVE ASSEMBLY 1"

MATERIAL: SALCO PE/PE

PROJECT #: 031212AN | SHEET #: 1 OF 1 | SCALE: 1 : 1

PART #: HSAVAPE0107

THIS PRINT, PROPERTY OF SALCO PRODUCTS INC, CONTAINS PROPRIETARY INFORMATION AND MUST NOT BE COPIED, REPRODUCED, OR USED DETRIMENTALLY TO OUR INTEREST.